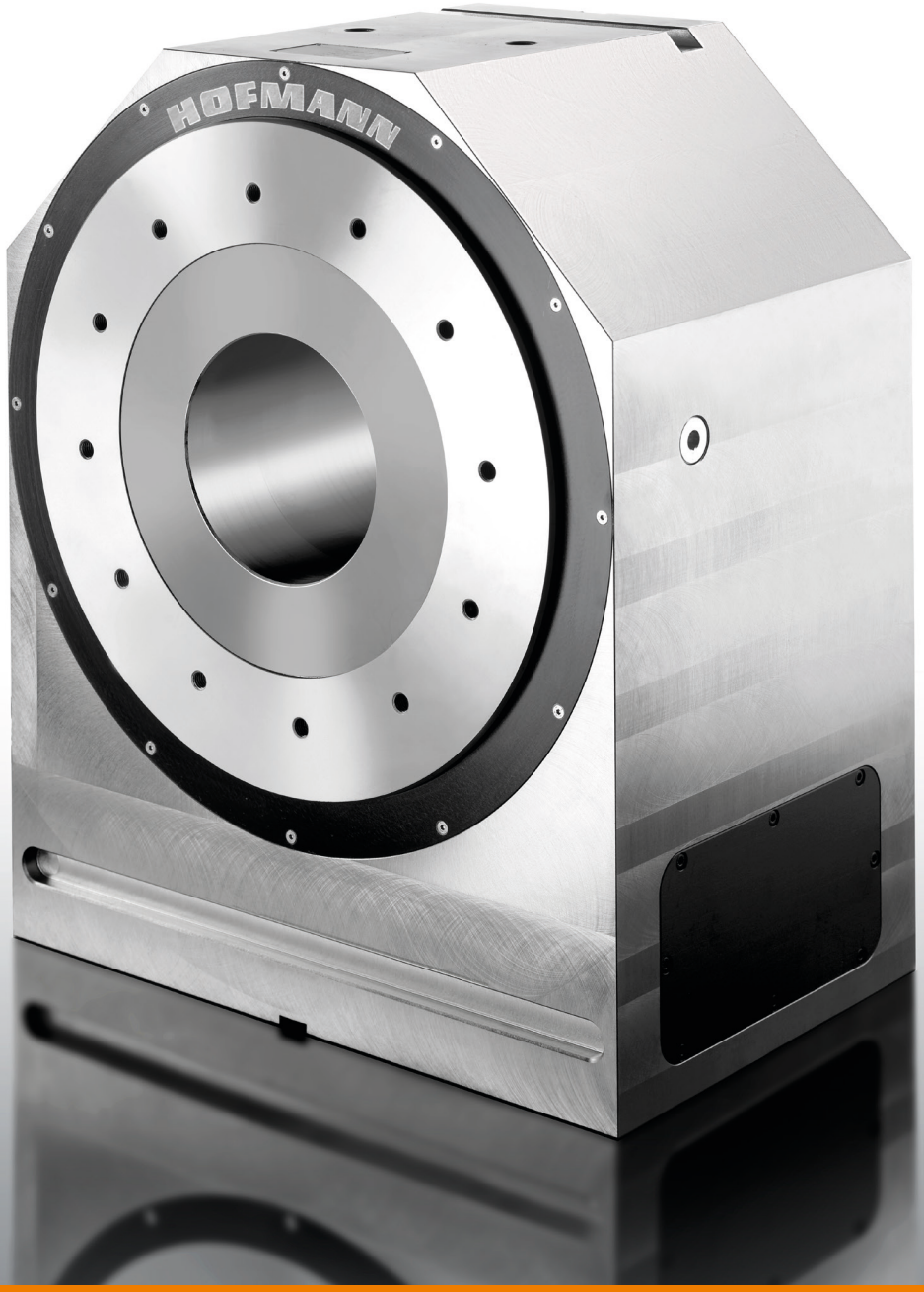

Dividing Units **HD** with Direct Drive

WERKZEUGSYSTEME
MÜLLER GMBH
HOFMANN
MESS- UND TEILTECHNIK

Direct driven

Single-Axis NC-Rotary Tables HD

MAIN CHARACTERISTICS

- NC indexing device series with a direct drive for use as a 4th axis on a machining centre
- Highest precision thanks to in-house production and quality control
- Housing is applicable for horizontal and vertical turning axis
- Absolutely free of clearance thanks to the torque motor
- Almost free from wear for stable quality
- High speeds and torques achievable because of the torque motor
- Various direct measuring systems compliant with the precision requirement deliverable
- High rigidity by using an axial-radial angular contact ball bearing
- Pneumatic safety clamping:
  - Declamping with 6 bar
  - Clamping with 0 bar by means of a spring assembly (emergency stop)
  - Clamping force doubled with spring assembly and 6 bar at the opposite site
- Wide range of accessories available

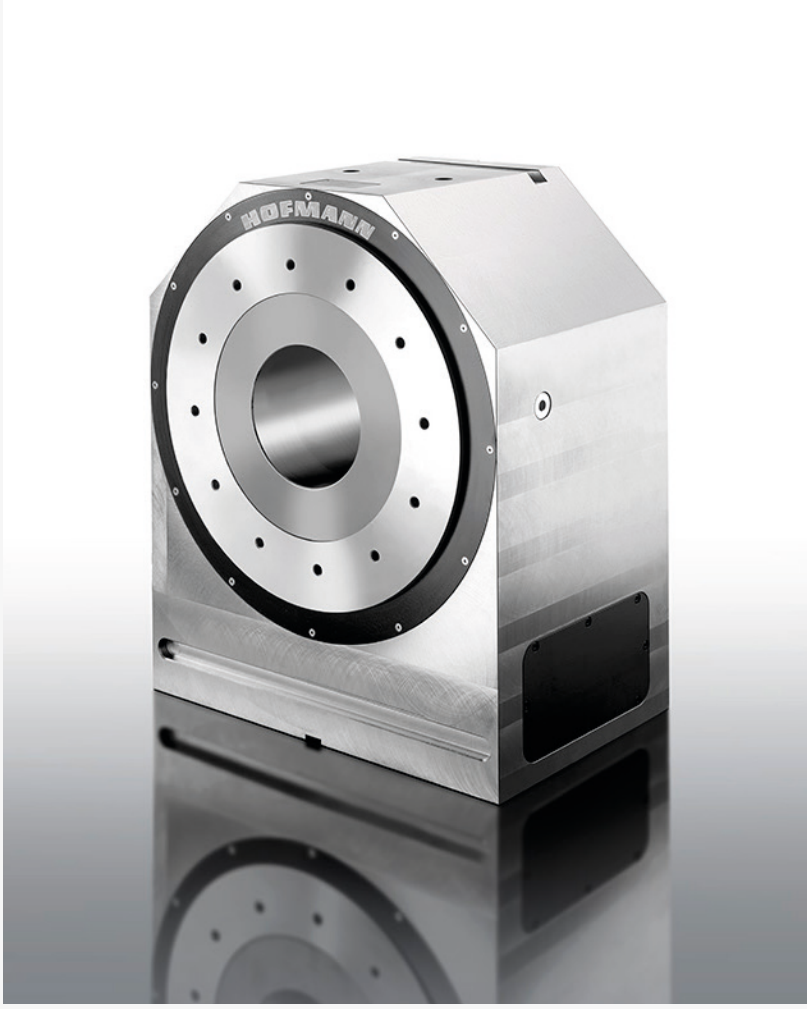

SWIVELLING DIVIDING UNITS HDS

Swivelled dividing units HDS are using dividing units from HD series as rotating and tilting axis. The modular design allows an easy adaptation to customer requirements.

Multi spindle versions, hydraulically clamped supports and direct measuring systems are available as well.

SPECIAL VERSIONS HD-HDS

- Outside dimensions of dividing unit in a cubic or round housing according to the machine interior
- Drive design on rotation speed or high torque
- Drive with torque motors according to customers specification
- Combination of worm drive and torque motor at tilting dividing unit
- Accessories like dividing units RWNC

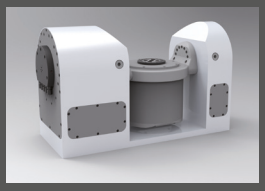

TECHNICAL DATA

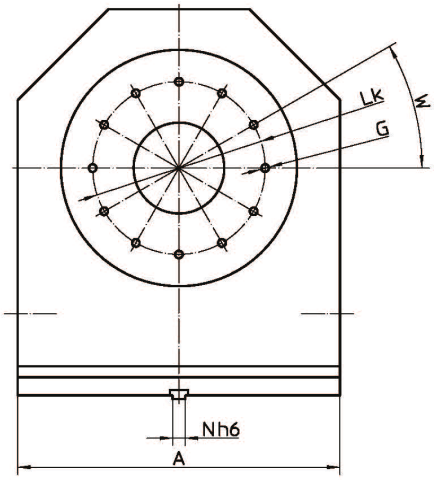

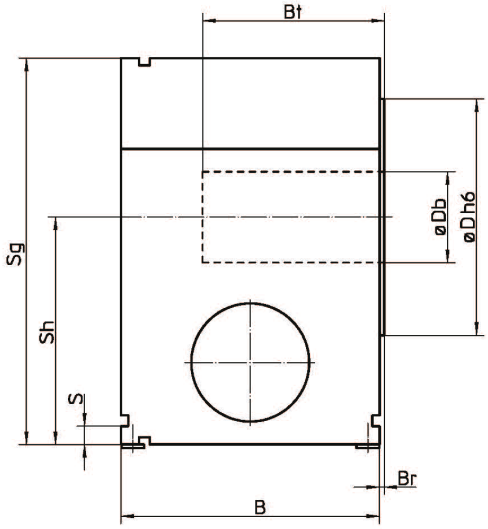

Type		A	B	Br	Bt	Ø D h6	Ø Db	G	Lk	N h6	S	Sh	Sg	W
HD-200/50	(mm)	260	220	7	100	100	65	M8/16	82	10-36	20	200	330	12x30°
HD-200/75			245		125									
HD-200/100			270		150									
HD-200/125			295		175									
HD-250/50	(mm)	360	260	8	150	250	100	M10/20	200	10-36	20	250	540	12x30°
HD-250/75			285		175									
HD-250/100			310		200									
HD-350/50	(mm)	480	285	10	175	410	150	M12/24	320	10-36	40	350	590	12x30°
HD-350/75			305		200									
HD-350/100			335		230									
HD-400/50	(mm)	580	320	15	226	480	200	M16/32	380	10-36	40	400	690	12x30°
HD-400/75			340		246									
HD-400/100			370		276									

Direct driven

Single-Axis NC-Rotary Tables HD

Type		200/50	200/75	200/100
Weight	(kg)	125	140	155
IDAM Motor Typ		RI17-3P	RI17-3P	RI17-3P
IDAM Motor Size		168x50	168x75	168x100
Spindle RPM with design L	(1/min)	334	207	143
Spindle RPM with design M	(1/min)	721	461	332
Spindle RPM with design H	(1/min)	x	x	x
Drive torque uncooled	(Nm)	32	50	67
Drive torque cooled	(Nm)	76	121	168
Indexing accuracy with ECN 113	(sec)	± 30“	± 30“	± 30“
Indexing accuracy with RCN 2xxx	(sec)	± 5“	± 5“	± 5“
Indexing accuracy with RCN 5xxx	(sec)	± 2.5“	± 2.5“	± 2.5“
Indexing accuracy with RCN 8xxx	(sec)	± 1“	± 1“	± 1“
Circular runout of indexing spindle face	(mm)	0.01	0.01	0.01
Axial runout of indexing spindle face	(mm)	0.01	0.01	0.01
Pressure for declamping safety clamping	(bar)	6.0	6.0	6.0
Holding torque of safety clamping at 0 bar (zero pressure	(Nm)	240	240	240
Holding torque of clamping with supplementary air 6 bar	(Nm)	420	420	420
Maximum load capacity for horizontal axis	(kg)	200	200	200
Maximum load capacity for horizontal axis with tailstock	(kg)	400	400	400
Maximum load capacity for horizontal axis with support	(kg)	800	800	800
Maximum load capacity for vertical axis	(kg)	750	750	750
Maximum axial force	(KN)	45	45	45
Maximum radial force	(KN)	15	15	15
Tilting moment at closed clamping with supplementary air	(Nm)	3,000	3,000	3,000

200/125	250/50	250/75	250/100	350/50	350/75	350/100	400/50	400/75	400/100
170	235	260	285	415	460	505	680	750	820
RI17-3P	RI11-3P	RI11-3P	RI11-3P	RI13-3P	RI13-3P	RI13-3P	RI11-3P	RI11-3P	RI11-3P
168x125	250x50	250x75	250x100	298x50	298x75	298x100	384x50	384x75	384x100
106	284	178	126	213	134	95	143	71	50
257	361	229	163	443	282	204	203	127	92
x	x	x	x	x	x	x	x	x	x
82	71	111	152	130	204	277	180	290	402
214	163	262	363	349	486	676	468	755	1.043
± 30″	± 30″	± 30″	± 30″	± 30″	± 30″	± 30″	± 30″	± 30″	± 30″
± 5″	± 5″	± 5″	± 5″	± 5″	± 5″	± 5″	± 5″	± 5″	± 5″
± 2.5″	± 2.5″	± 2.5″	± 2.5″	± 2.5″	± 2.5″	± 2.5″	± 2.5″	± 2.5″	± 2.5″
± 1″	± 1″	± 1″	± 1″	± 1″	± 1″	± 1″	± 1″	± 1″	± 1″
0.01	0.01	0.01	0.01	0.01	0.01	0.01	0.01	0.01	0.01
0.01	0.01	0.01	0.01	0.01	0.01	0.01	0.01	0.01	0.01
6.0	6.0	6.0	6.0	6.0	6.0	6.0	6.0	6.0	6.0
240	1,000	1,000	1,000	2,340	2,340	2,340	3,300	3,300	3,300
420	1,950	1,950	1,950	4,200	4,200	4,200	6,100	6,100	6,100
200	320	320	320	650	650	650	1,000	1,000	1,000
400	900	900	900	2,000	2,000	2,000	3,000	3,000	3,000
800	1,800	1,800	1,800	4,000	4,000	4,000	6,000	6,000	6,000
750	1,200	1,200	1,200	3,500	3,500	3,500	5,000	5,000	5,000
45	55	55	55	75	75	75	95	95	95
15	20	20	20	25	25	25	35	35	35
3,000	6,000	6,000	6,000	10,000	10,000	10,000	14,000	14,000	14,000

Werkzeugsysteme Müller GmbH
Hofmann Mess- und Teiltechnik

Robert-Bosch-Straße 5 | 72124 Pliezhausen
Telefon +49 7127 97558-130 | Telefax +49 7127 97558-015
info@hofmann-mt.de | www.hofmann-mt.com